REV	CHANGE NUMBER	DATE
A	ECOWHT9249	2/28/13

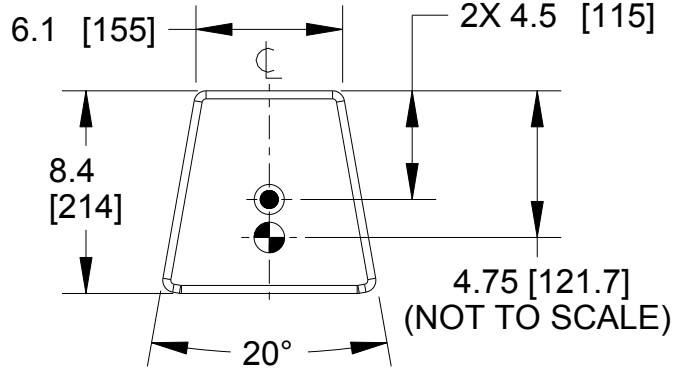

TOP

NOTES:
1. SYMBOL ◐ INDICATES CENTER OF BALANCE.
2. SYMBOL ⭘ INDICATES MOUNTING POINT, M8 THREADED HOLE FOR EXTERNAL POLE CUP.
3. SYMBOL ⊕ INDICATES 2.00 [50.8] x 4.25 [108.0] x M6 MOUNTING PATTERN FOR CUSTOMER SUPPLIED MOUNTING SOLUTION.
4. SYMBOL ◉ INDICATES MOUNTING POINT, M6 THREADED HOLE.
5. WEIGHT APPROX. 15 lb [6.8 kg].
6. SHIPPING WEIGHT APPROX. 21 lb [9.5 kg].

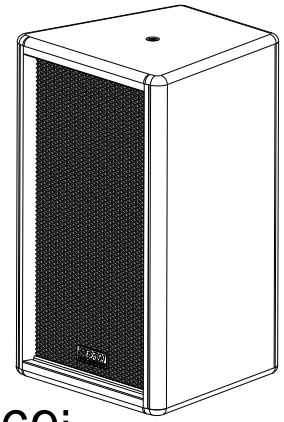

VFR69i

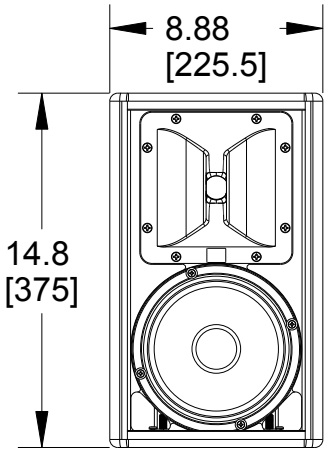

FRONT

GRILLE NOT SHOWN FOR CLARITY

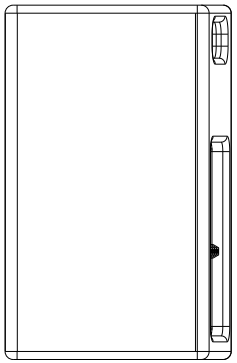

VIEW A-A

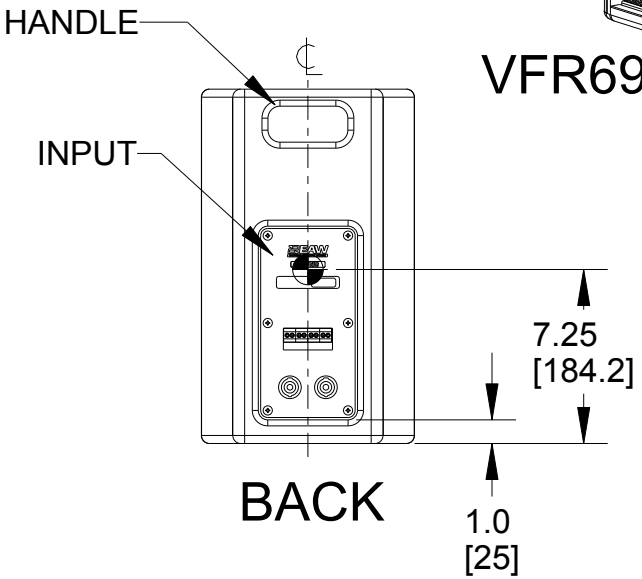

BACK

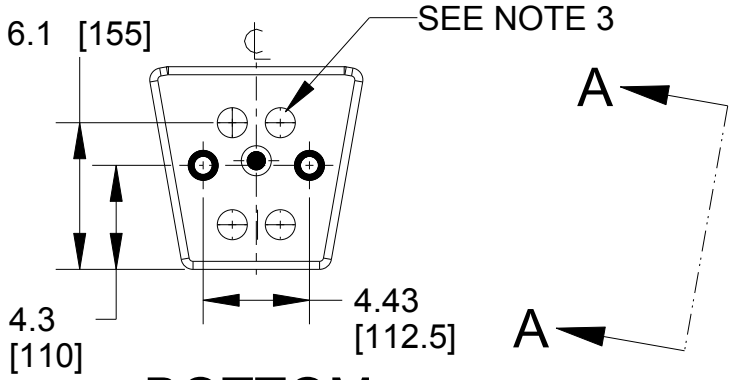

BOTTOM

THIRD ANGLE PROJECTION

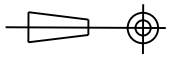

THE INFORMATION CONTAINED HEREIN IS PROPRIETARY AND CONFIDENTIAL PROPERTY OF LOUD TECHNOLOGIES, INC. ALL RIGHTS RESERVED

UNLESS OTHERWISE SPECIFIED:
ALL DIMENSIONS ARE IN INCHES
DUAL [MM] DIMENSIONS
FOR REF ONLY

TOLERANCE IN INCHES
LINEAR ± 0.13 in / ± 3.3 mm
ANGLES ± 1°

(X.XX) = REF DIMS
NO TOLERANCE IMPLIED

TSC = THEORETICAL SHARP CORNER

DIMENSIONS ACROSS CENTERLINES
TO BE SYMMETRICAL

EAW www.eaw.com

TITLE:
DWG CUSTOMER VFR69i
[MECHANICAL SPECIFICATION]

A	SHEET 1 OF 1	SCALE: 0.125

DRAWING NUMBER: 2041378-CD
REVISION: A

PRO ENGINEER