NOTES:
1. MATERIAL: 8 GA (.125) ALUMINUM, 5052-H32
2. FINISH: DUPONT EFB-504-SO RAVEN BLACK POWDERCOAT, OR
   SHERWIN WILLIAMS POWDURA EPOXY POWDERCOAT
   OR MORTON 10-7068 VISTA BLACK POWDERCOAT.
3. MINIMUM BEND RADIUS 0.25 UNLESS OTHERWISE SPECIFIED.
4. LATEST REVISION OF 3D CAD FILE (SAME REVISION AS 2D DRAWING FILE) TAKES PRECEDENCE OVER 2D DRAWING FILE.
5. REMOVE BURRS AND SHARP EDGES PRIOR TO FINISH.
6. PARTS TO BE CLEANED AND FREE OF GREASE AND DEBRIS.
7. EAW PART NUMBER, CURRENT EAW REVISION AND DATE MANUFACTURED TO BE STAMPED, LABELED OR PERMANENTLY MARKED WHERE SHOWN IN A CONTRASTING COLOR. LETTERS TO BE .125 [3.18 mm] TALL MINIMUM.
8. SUPPLIER I.D. TO BE PERMANENTLY MARKED WHERE SHOWN.
9. THIS ITEM MUST BE COMPLIANT WITH EU DIRECTIVE 2002/95/EC (RoHS). USE ONLY RoHS COMPLIANT MATERIALS AND FINISHES.

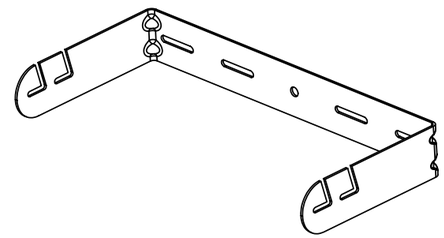

REVISIONS

REV	DESCRIPTION	APPR / DATE
1	NEW ISSUE PER DSRWHT5080 JAB 7/22/04	KFH 7/28/04 TSD 7/28/04
2	MATERIAL WAS 11GA SS; ADDED Ø.55; 10.25 WAS 10.3; .33 WAS .3; .37 WAS .39; UPDATED FORMAT AND CHANGED TOLERANCE BLOCK PER DSRWHT5876 JFD 3/1/05	KFH 3/1/05 TSD 3/2/05
A	RELEASE TO PRODUCTION WITH THE FOLLOWING CHANGES: CHANGE 10.25 to 10.3, FULL R to 2X R FULL, 4X .33 to 4X .3, 4X.37 to 4X .4 SEE NOTE 5 to SEE NOTE 7, 1.34 to (1.34), 3.00 to 3.0, 2X 1.50 to 2X 1.5, , 6.75 to 6.8, 2X 2.00 to 2X 2.0 ADD CENTER LINE NOTES, (2X R.25) RENUMBER NOTES 3,4,5 to 5,6,7 AND ADD NEW NOTES 3 AND 4 PER DSRWHT6513 CWF 09-13-05	JFD 9/13/05 MJD 9/14/05
B	REVISED NOTE 7; ADDED NOTES 8 & 9 PER ECOWHT4153 JFD/DM 7/7/06	SAO 7/7/06

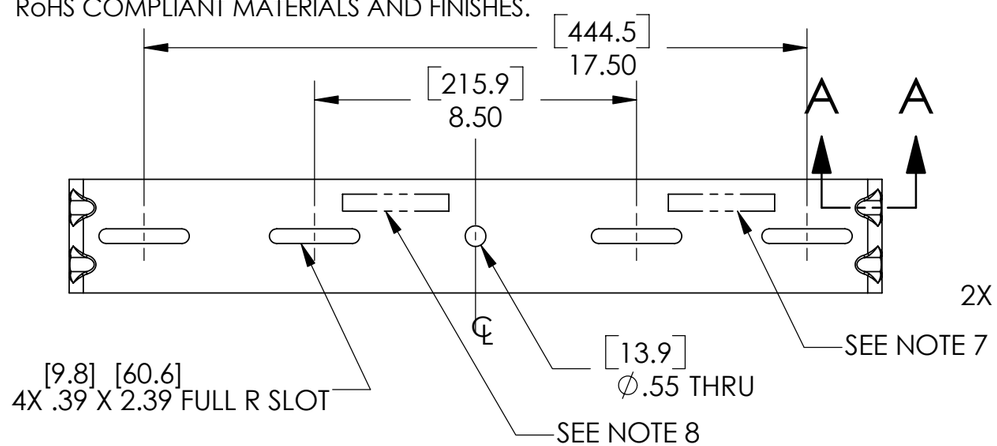

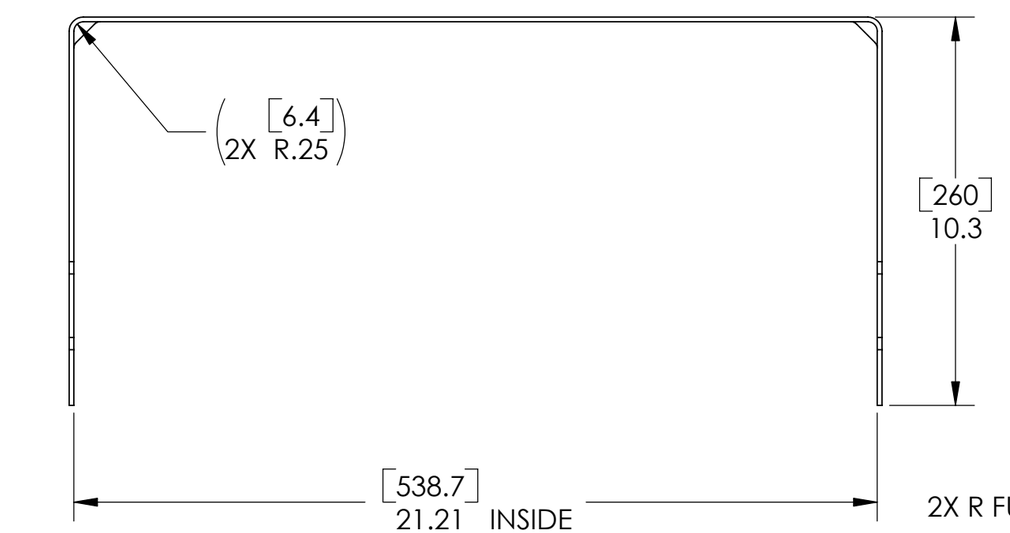

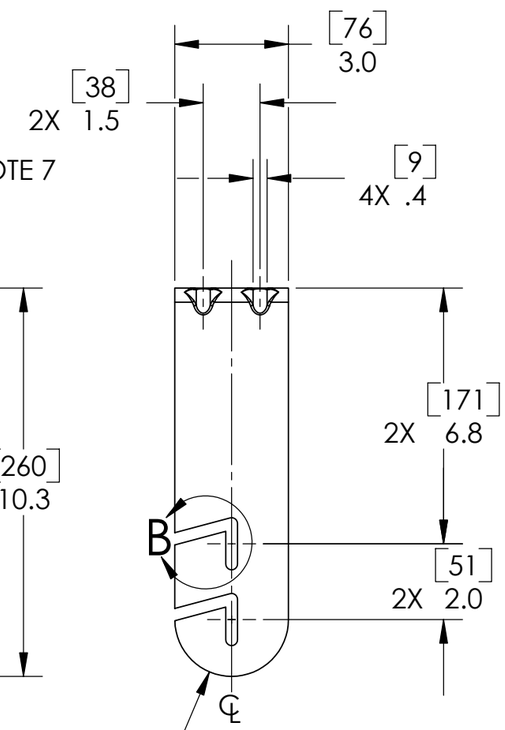

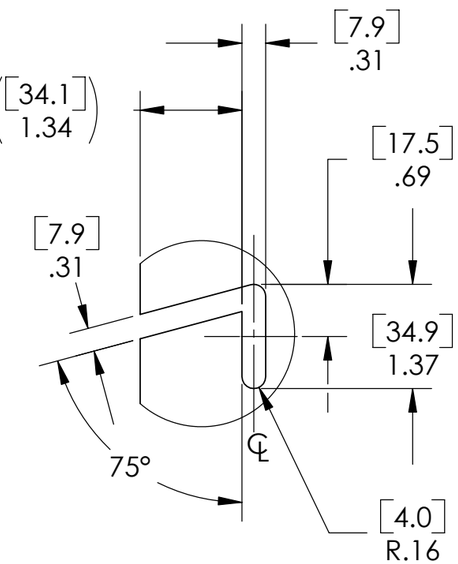

DETAIL B
SCALE 1 : 2
4X

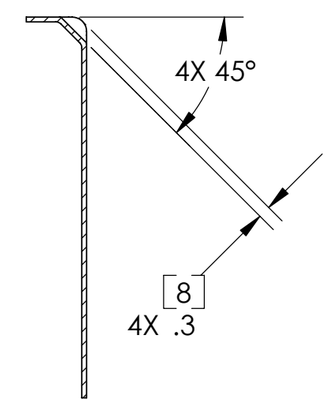

SECTION A-A

DOCUMENT CONTROL PER SPECIFICATION 4.5.201

THIRD ANGLE PROJECTION

THIS DRAWING IS THE PROPERTY OF EAW AND SHALL NOT BE COPIED, REPRODUCED, OR USED AS THE BASIS FOR MANUFACTURE OR SALE OF APPARATUS WITHOUT WRITTEN AUTHORIZATION.
DO NOT SCALE DRAWING.

UNLESS OTHERWISE SPECIFIED:
ALL DIMENSIONS ARE IN INCHES
DUAL [MILLIMETERS] DIMENSIONS FOR REF ONLY

TOLERANCE IN INCHES
X.X ±.03 X.XX±.015 X.XXX±.005
FRACTIONS ±1/32
ANGLES ±1/2°
(X.XX) = REF DIMS
NO TOLERANCE IMPLIED

TSC = THEORETICAL SHARP CORNER

DIMENSIONS ACROSS CENTERLINES TO BE SYMETRICAL

STATUS	PRODUCTION	
APPROVALS		DATE
DRAWN:	JAB	7/22/04
CHECKED:	JFD	9/15/05
DES ENG:	MJD	9/15/05
MFG ENG:	MD	9/15/05

EAW EASTERN ACOUSTIC WORKS
ONE MAIN STREET WHITINSVILLE, MA 01588 USA

TITLE: BRACKET/WALLMOUNT 80 SERIES

B | SHEET 1 OF 1 | SCALE: 1:1

DWG. NO. 0012346 | REV B

SOLID WORKS
0012346 (B) Bracket Wallmount 80 SERIES